Stepper Motor

Author: ElectroMagneticWorks

Company: ElectroMagneticWorks Inc.

1. Introduction
2. Model View
3. Materials
4. Load & Restraint Information
5. Coils Information
6. Force and Torque Information
7. Study Properties
8. Results Table
9. Magnetic Flux Density Results
10. Magnetic Field Intensity Results
11. Applied Current Density Results
12. Current Density Results
13. Force Density Results
14. Appendix

---

1. Introduction

AC Magnetic Analysis of a four-phase Stepper Motor.

---

2. Model View

Stepper Motor 4 phases_Current View

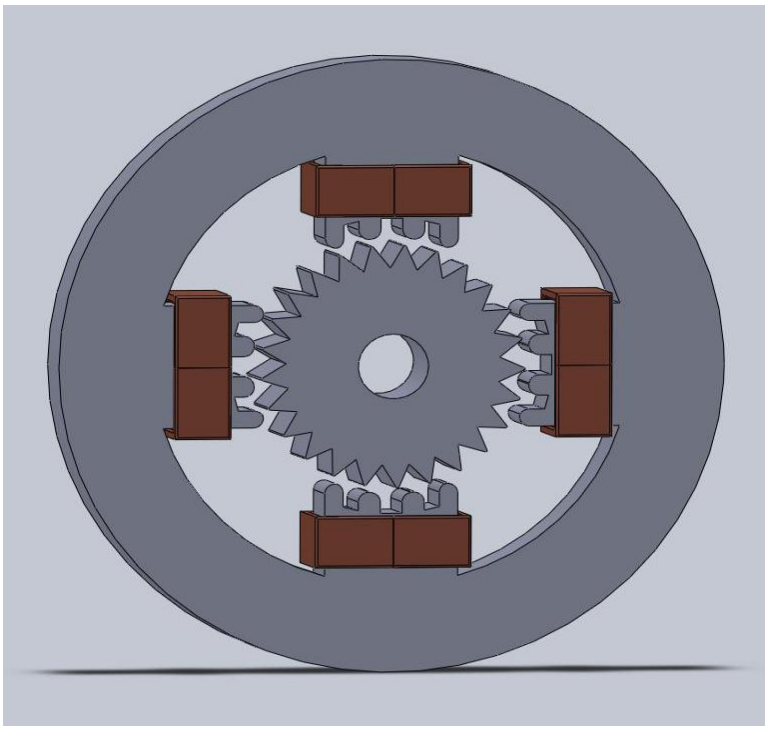

Stepper Motor 4 phases_Isometric View

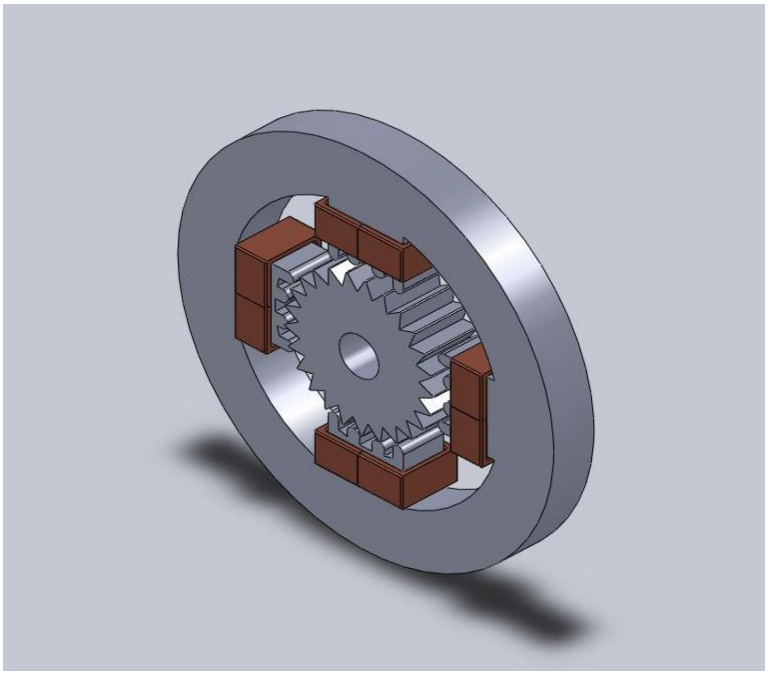

Stepper Motor 4 phases_Current View (Mesh)

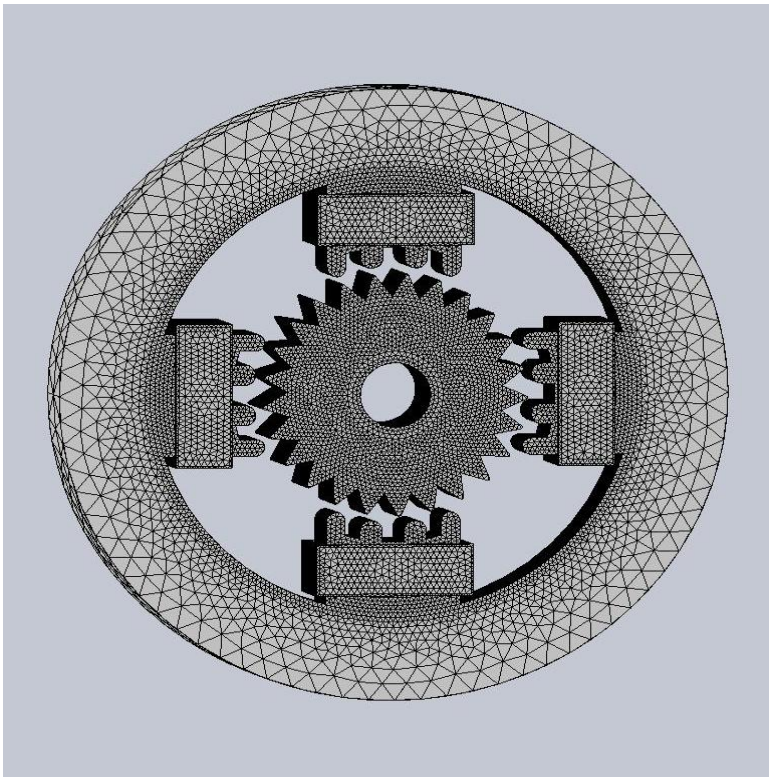

3. Materials

Note: R.P. stands for Relative Permeability

Nbr.	Part Name	Material Name	Permeability Type
1	Coil^Stepper Motor 4 phases-1-Body 1 (Split1[1])	Copper	Isotropic
2	Coil^Stepper Motor 4 phases-1-Body 2 (Split1[2])	Copper	Isotropic
3	Coil^Stepper Motor 4 phases-2-Body 1 (Split1[1])	Copper	Isotropic
4	Coil^Stepper Motor 4 phases-2-Body 2 (Split1[2])	Copper	Isotropic
5	Coil^Stepper Motor 4 phases-3-Body 1	Copper	Isotropic

	(Split1[1])		
6	Coil^Stepper Motor 4 phases-3-Body 2 (Split1[2])	Copper	Isotropic
7	Coil^Stepper Motor 4 phases-4-Body 1 (Split1[1])	Copper	Isotropic
8	Coil^Stepper Motor 4 phases-4-Body 2 (Split1[2])	Copper	Isotropic
9	Inner Air^Stepper Motor 4 phases-1-Body 1 (Cavity1)	Air	Isotropic
10	Outer Air^Stepper Motor 4 phases-1-Body 1 (Cavity1)	Air	Isotropic
11	Rotot^Stepper Motor 4 phases-1-Body 1 (Fillet1)	Mild Steel	Isotropic
12	Stator^Stepper Motor 4 phases-1-Body 1 (Fillet2)	Mild Steel	Isotropic

4. Coils Information

Coils

Nbr.	Name	Nbr.Of Turns	Magnitude	Phase	Components & Bodies
1	Wound Coil - 1	200	1.000000e+000	0.0000e+000deg	Coil^Stepper Motor 4 phases-1
2	Wound Coil - 2	200	1.000000e+000	1.5708e+000deg	Coil^Stepper Motor 4 phases-4
3	Wound Coil - 3	200	1.000000e+000	3.1416e+000deg	Coil^Stepper Motor 4 phases-3
4	Wound Coil - 4	200	1.000000e+000	4.7124e+000deg	Coil^Stepper Motor 4 phases-2

5. Force and Torque Information

Nbr.	Name	Torque Center	Components & Bodies
1	Virtual Work - 1	At origin	Rotot^Stepper Motor 4 phases-1

---

6. Study Properties

Mesh Information

Nbr.Of Nodes	Nbr.Of Elements	Element Size (m)	Tolerance (m)
263808	1585466	0.025000	0.000025

Mesh Controls information

Nbr.	Name	Mesh Size	Size Unit	Components & Bodies	Selected Faces
1	MeshControl - 1	1.000000	mm	Inner Air^Stepper Motor 4 phases-1	

Solver information

Frequency (Hz)	Compute Inductance
6.000000e+001	YES

7. Results Table

Force Results

	Fx-axis (N)	Fy-axis (N)	Fz-axis (N)
Virtual Work - 1	-2.595264e-001	-4.627497e-002	-3.603148e-004

Torque Results

	Tx-axis (N.m)	Ty-axis (N.m)	Tz-axis (N.m)
Virtual Work - 1	-1.695826e-005	2.051970e-005	6.690873e-004

Inductance Results (H)

Coil Name	Wound Coil - 1	Wound Coil - 2	Wound Coil - 3	Wound Coil - 4
Wound Coil - 1	9.669866e-003	3.804780e-003	3.486838e-003	4.069809e-003
Wound Coil - 2	3.804780e-003	9.433653e-003	3.750662e-003	3.549814e-003
Wound Coil - 3	3.486838e-003	3.750662e-003	9.548692e-003	4.017072e-003
Wound Coil - 4	4.069809e-003	3.549814e-003	4.017072e-003	9.908491e-003

Flux Linkage Results

Coil Name	Flux Linkage (Wb)
Wound Coil - 1	(-4.219024e-098 , -5.252785e+233)
Wound Coil - 2	(0.000000e+000 , 0.000000e+000)

Wound Coil - 3	(0.000000e+000 , 0.000000e+000)
Wound Coil - 4	(0.000000e+000 , 0.000000e+000)

Induced Voltage Results

Coil Name	Induced Voltage (V)
Wound Coil - 1	(5.120454e-039 , 2.164631e+004)
Wound Coil - 2	(0.000000e+000 , 0.000000e+000)
Wound Coil - 3	(0.000000e+000 , 0.000000e+000)
Wound Coil - 4	(0.000000e+000 , 0.000000e+000)

Losses Density Results

Solid Bodies	Ohmic Loss (W)
Coil^Stepper Motor 4 phases-3 - Body 2 (Split1[2])	6.308166e-001
Coil^Stepper Motor 4 phases-3 - Body 1 (Split1[1])	6.307492e-001
Coil^Stepper Motor 4 phases-4 - Body 2 (Split1[2])	6.308401e-001
Coil^Stepper Motor 4 phases-4 - Body 1 (Split1[1])	6.308489e-001
Coil^Stepper Motor 4 phases-2 - Body 2 (Split1[2])	6.308141e-001
Coil^Stepper Motor 4 phases-2 - Body 1 (Split1[1])	6.307872e-001
Stator^Stepper Motor 4 phases-1 - Body 1 (Fillet2)	3.395137e-001
Rotot^Stepper Motor 4 phases-1 - Body 1 (Fillet1)	6.777744e-002
Coil^Stepper Motor 4 phases-1 - Body 2 (Split1[2])	6.308388e-001
Coil^Stepper Motor 4 phases-1 - Body 1 (Split1[1])	6.308738e-001

Energy Results

Energy (J)	Co-Energy (J)
1.945740e-002	0.000000e+000

8. Magnetic Flux Density Results

Magnetic Flux Density @ phase 0 degrees

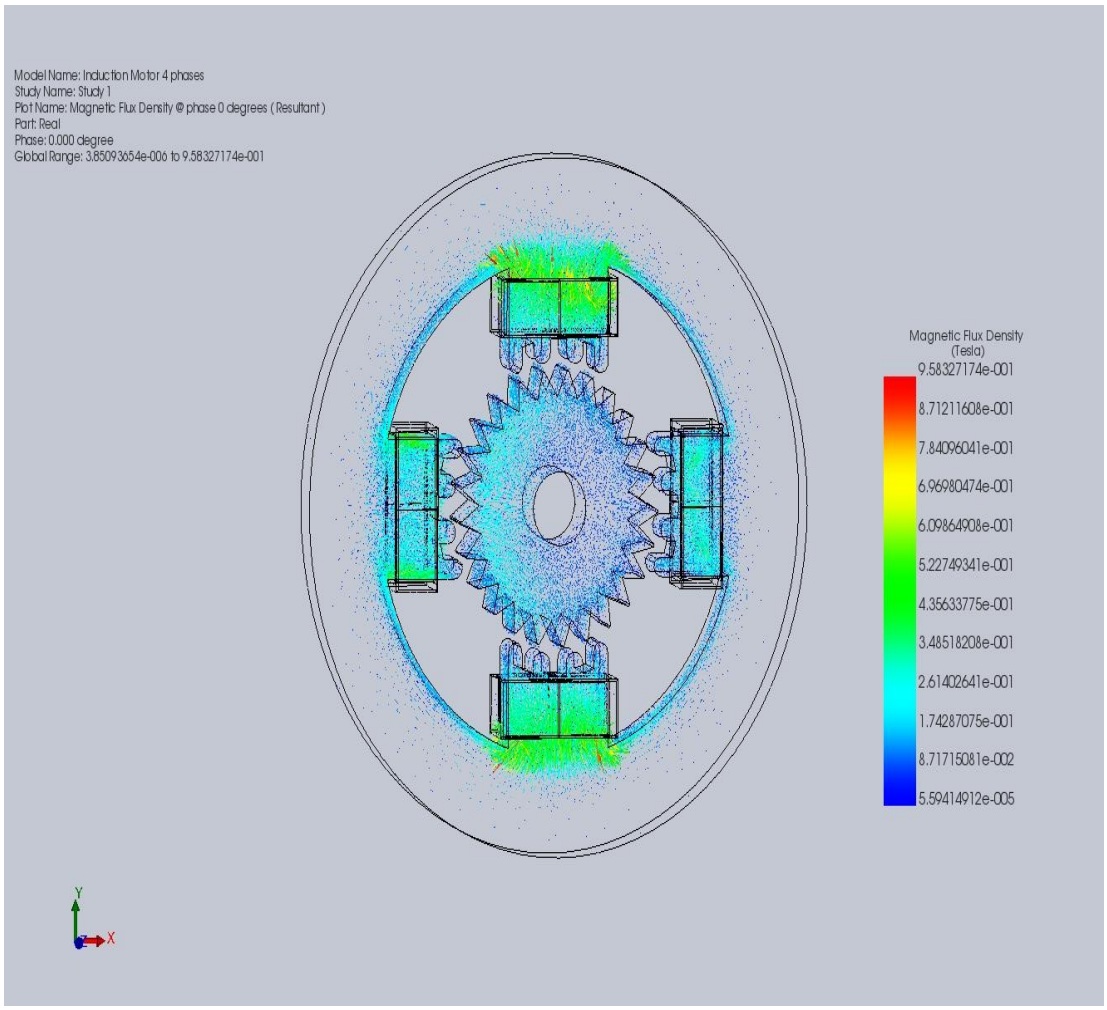

Magnetic Flux Density @ phase 90 degrees

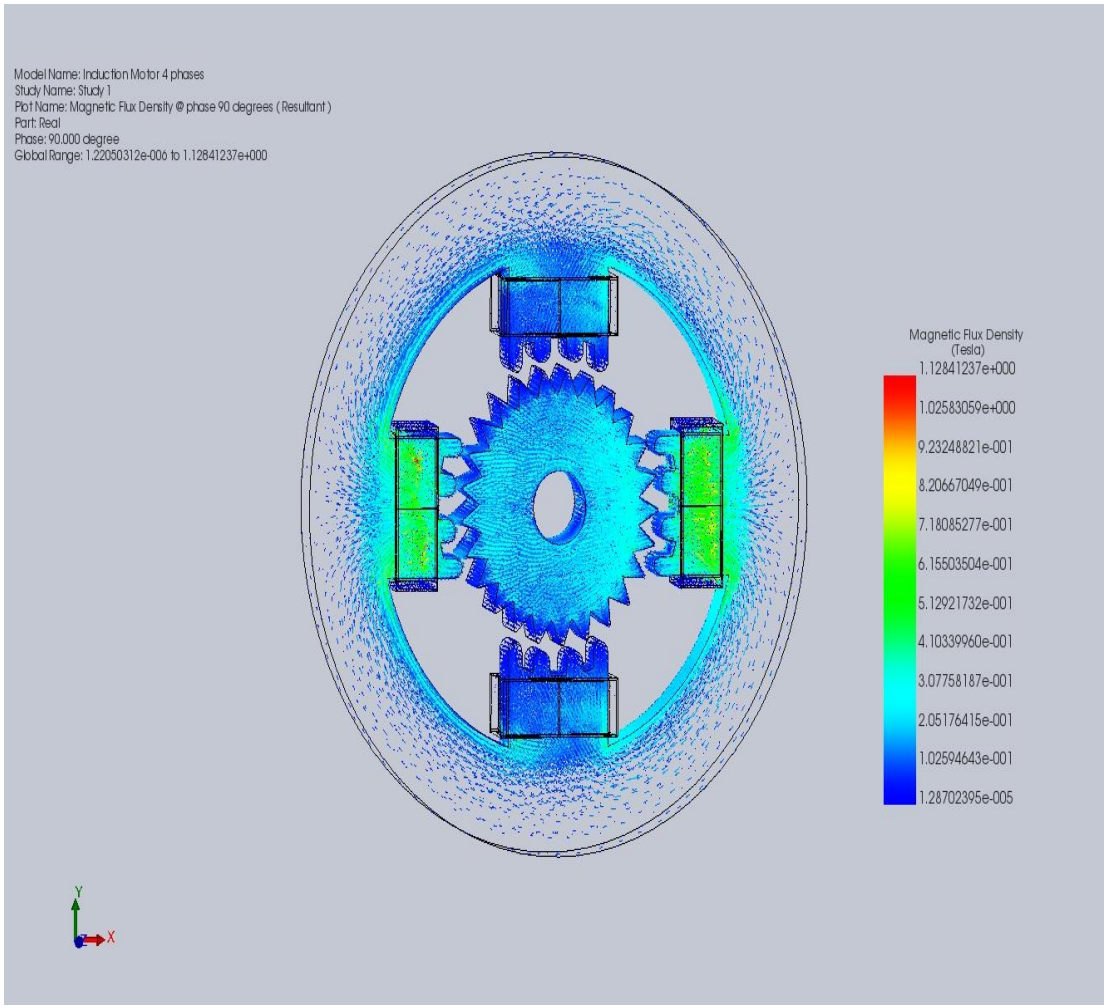

Magnetic Flux Density @ phase 180 degrees

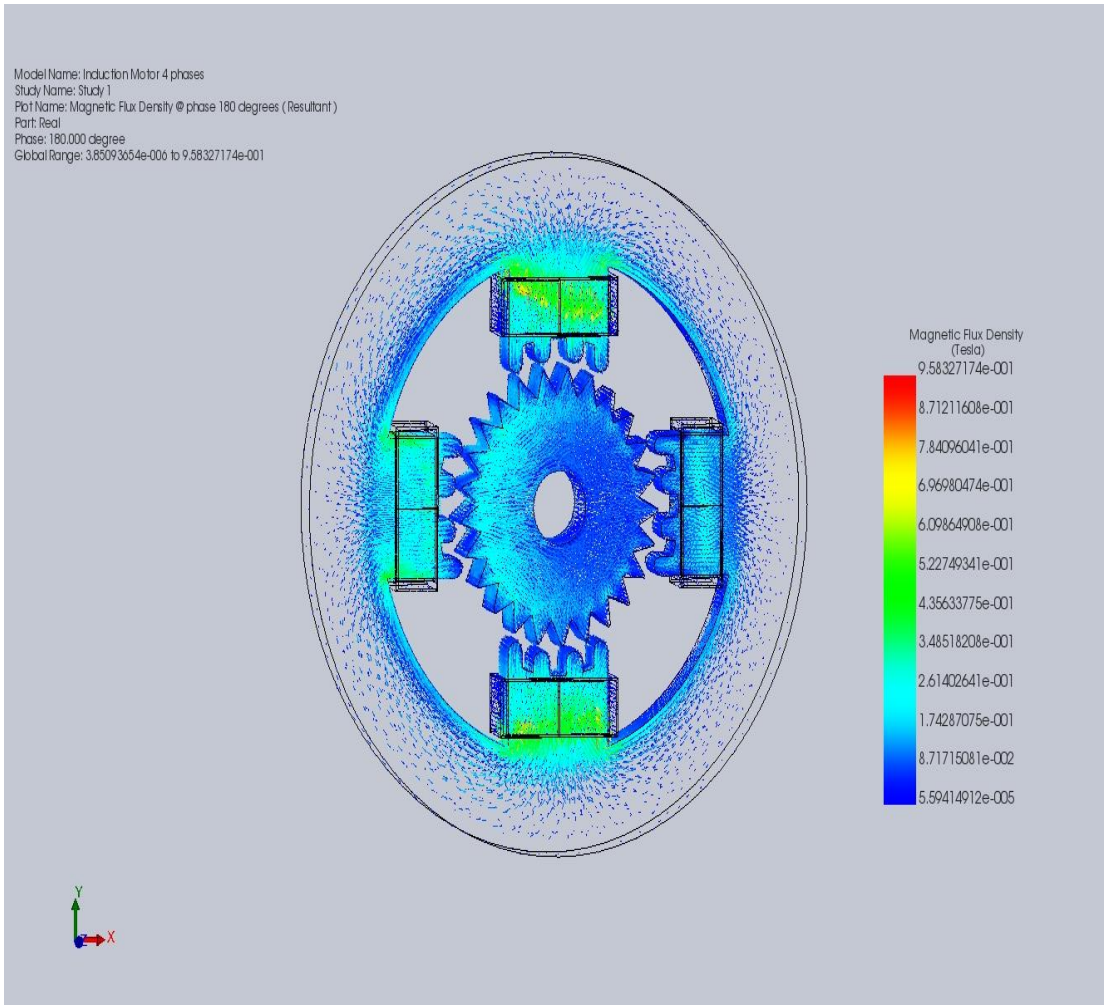

Magnetic Flux Density @ phase 270 degrees

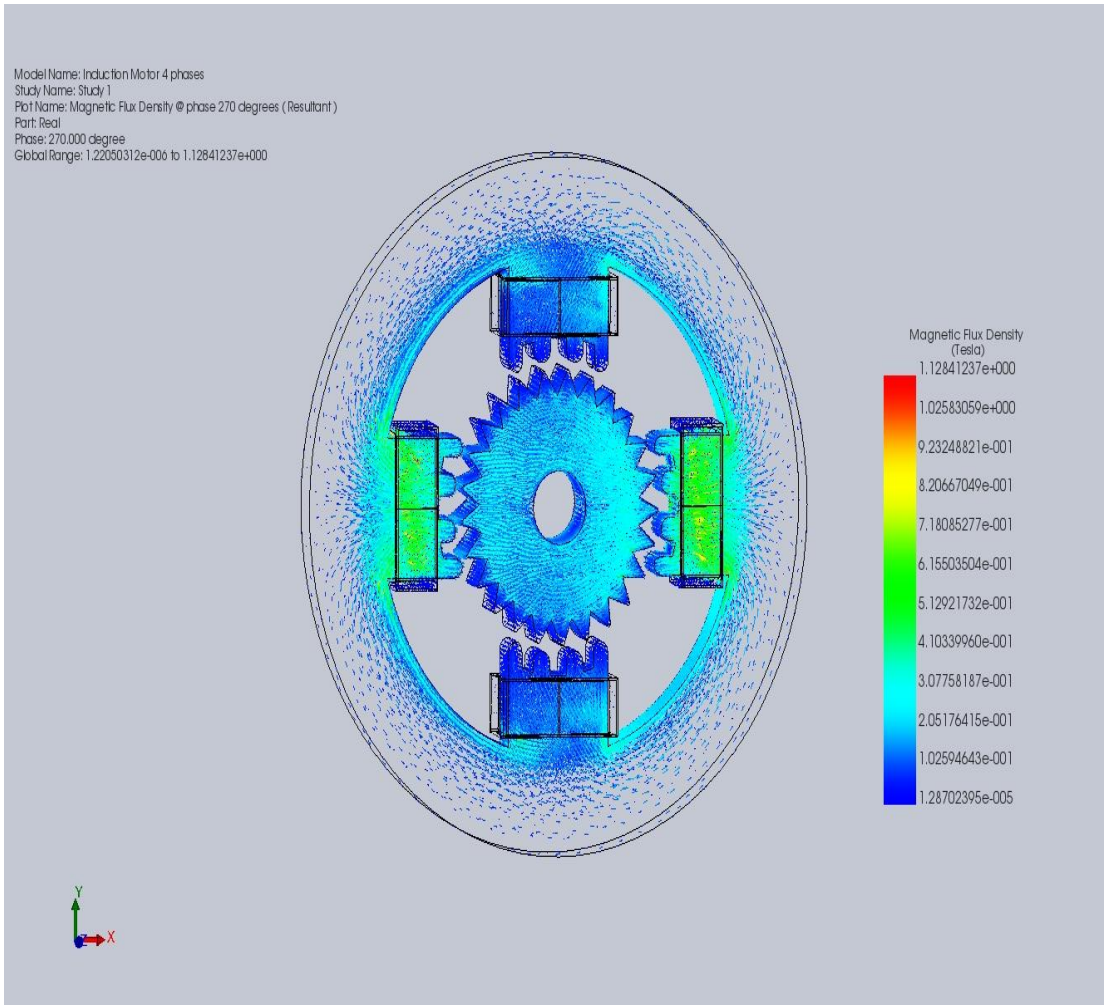

9. Magnetic Field Intensity Results

Magnetic Field Intensity @ 0 degree

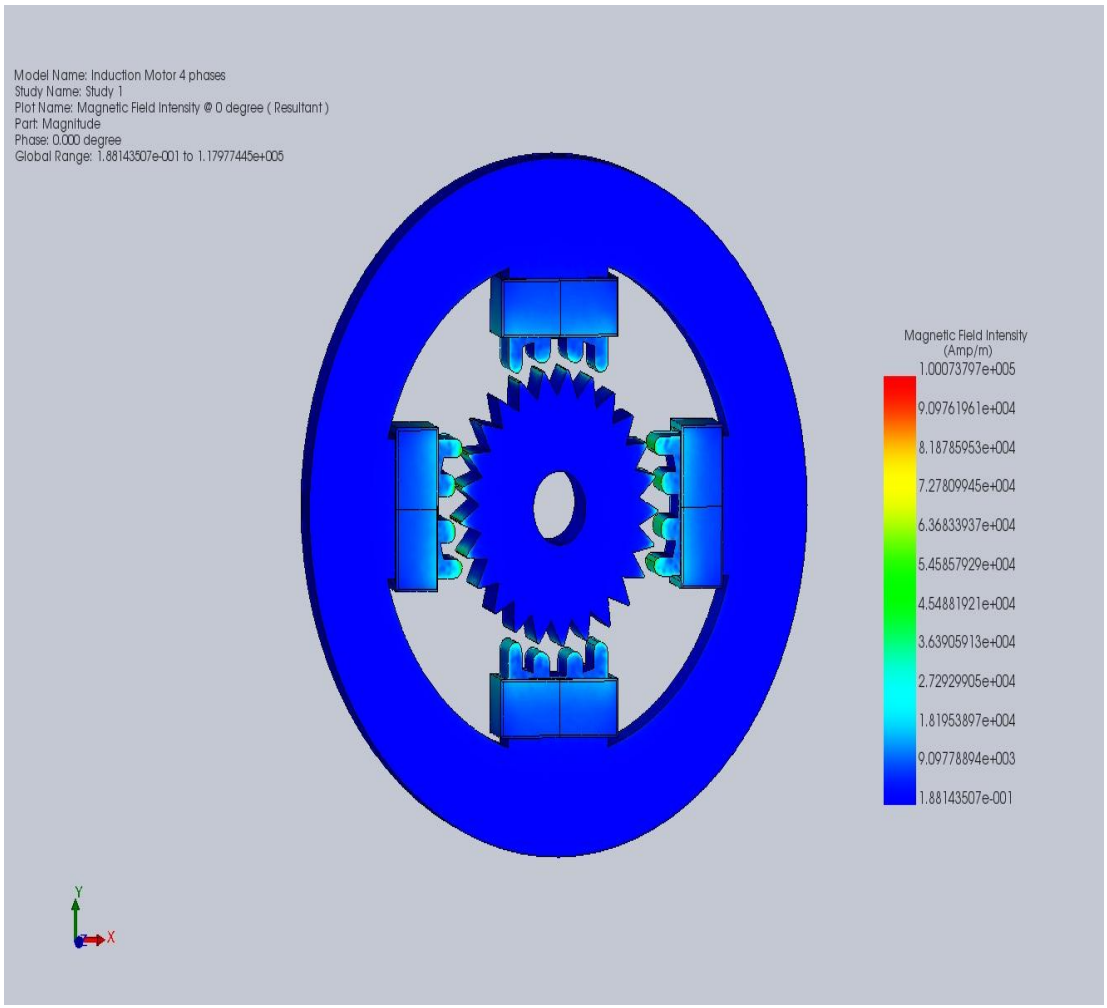

Magnetic Field Intensity @ 90 degree

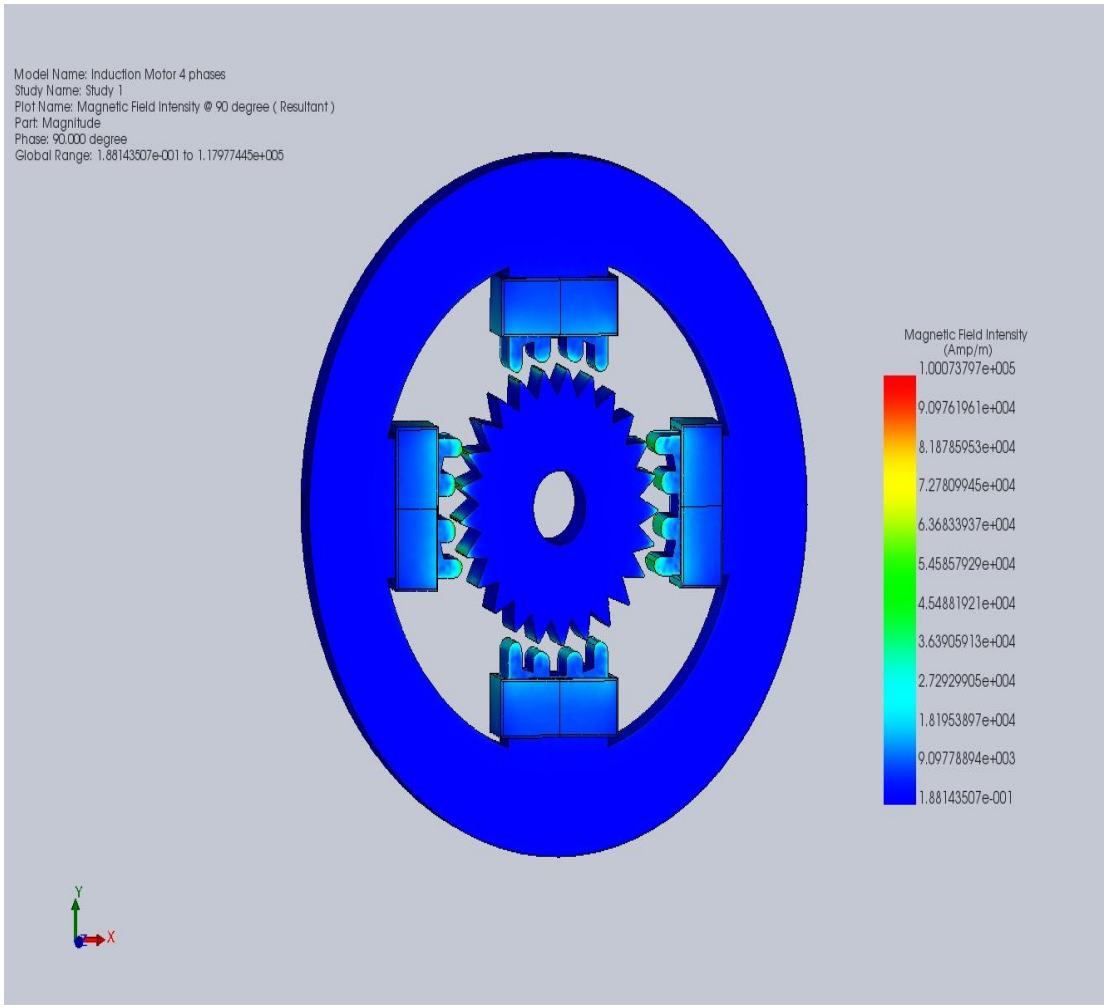

Magnetic Field Intensity @ 180 degree

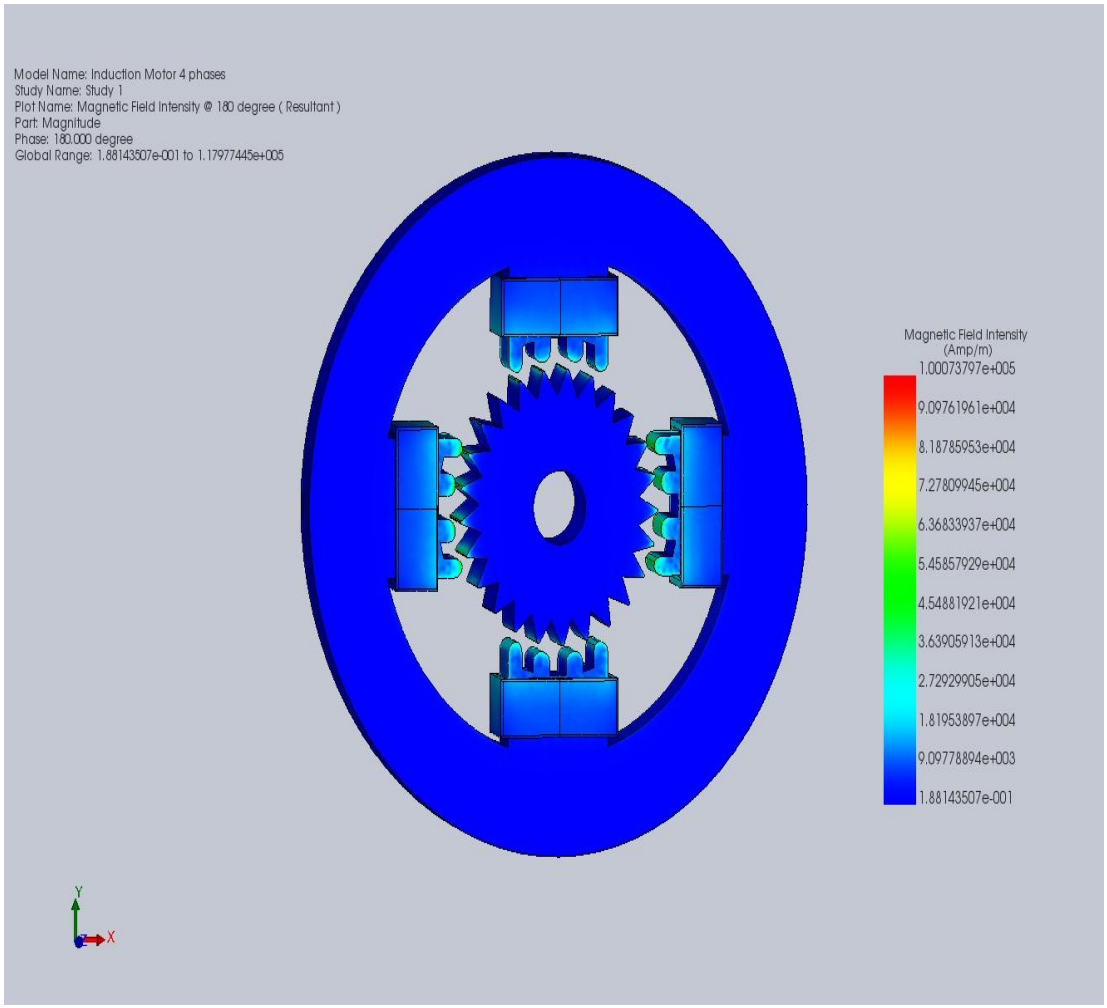

Magnetic Field Intensity @ 270 degree

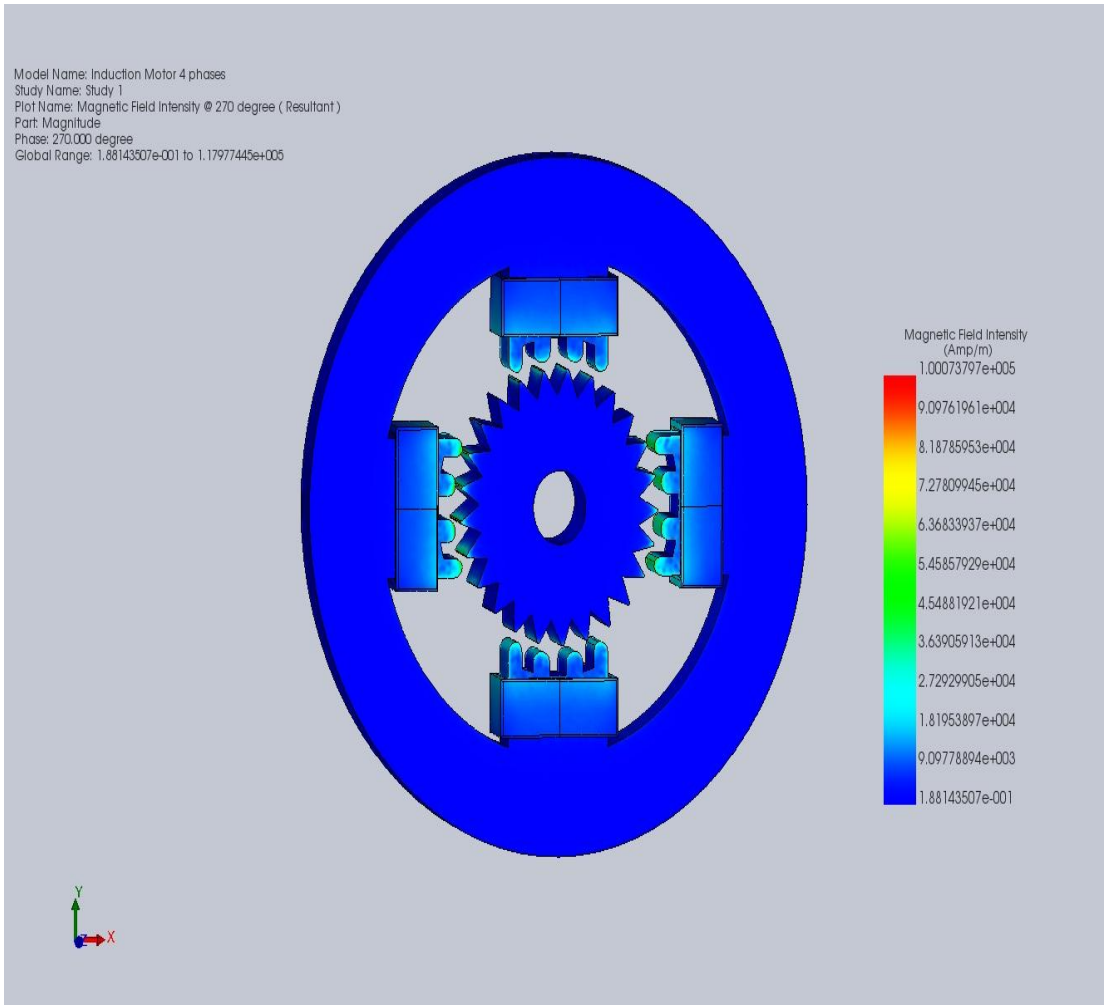

10. Applied Current Density Results

Applied Current Density @ 0 degree

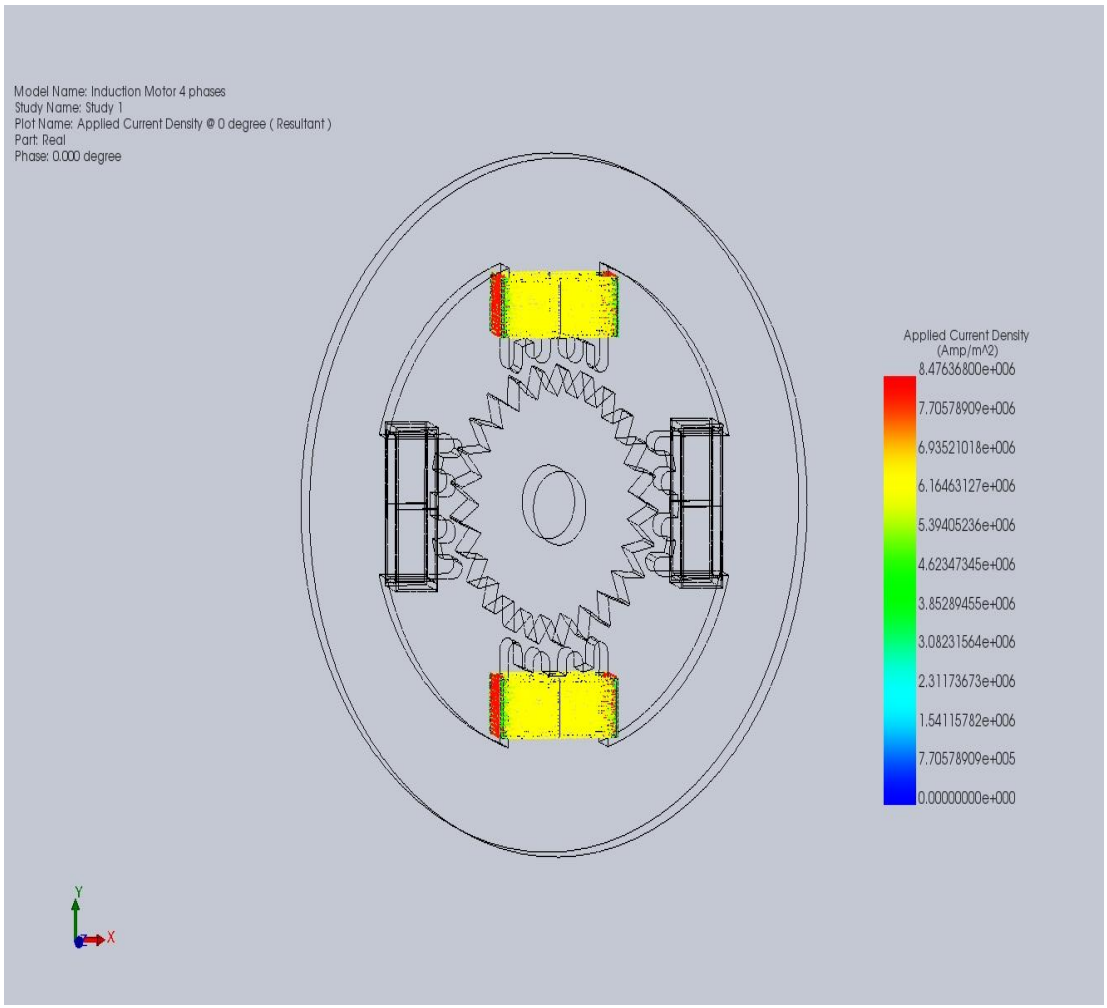

Applied Current Density @ 90 degree

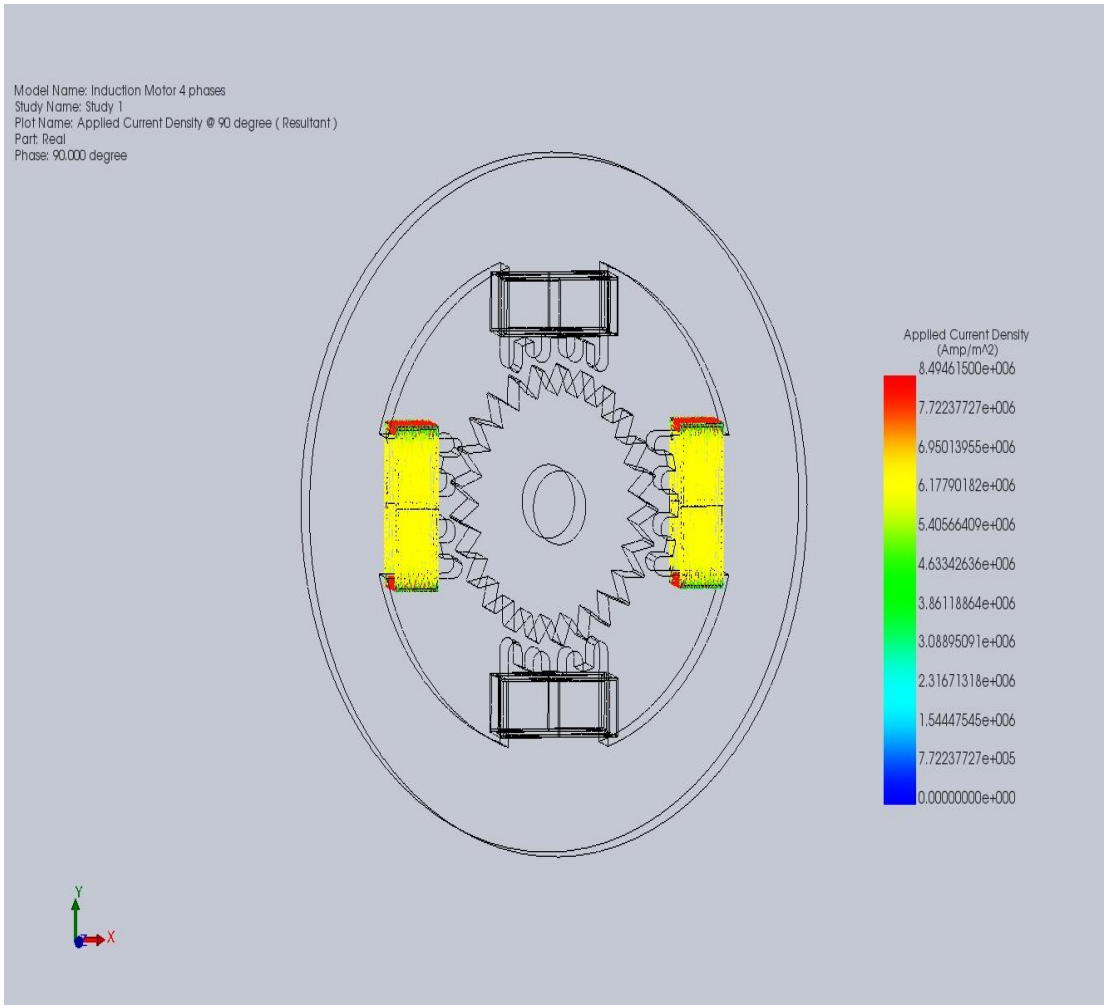

Applied Current Density @ 140 degree

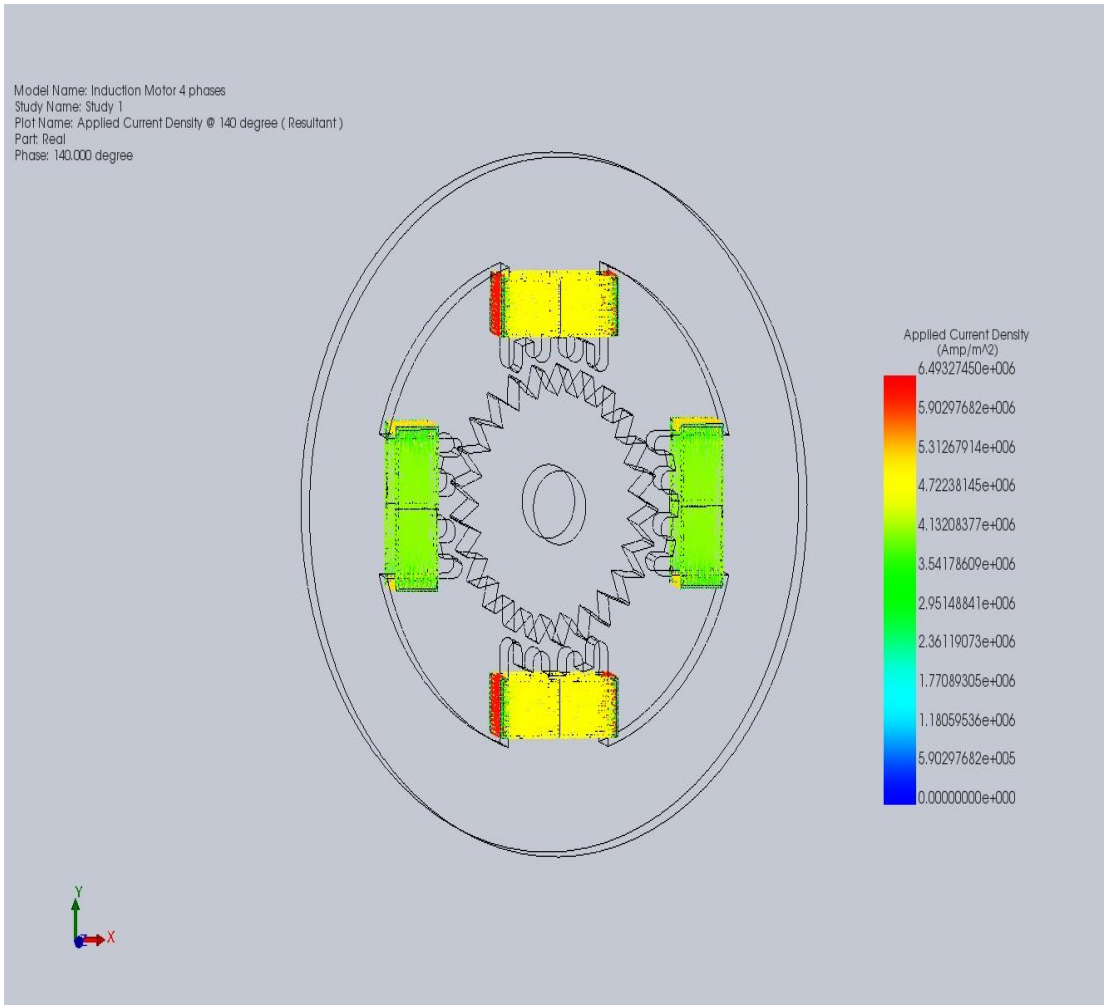

Applied Current Density @ 315 degree

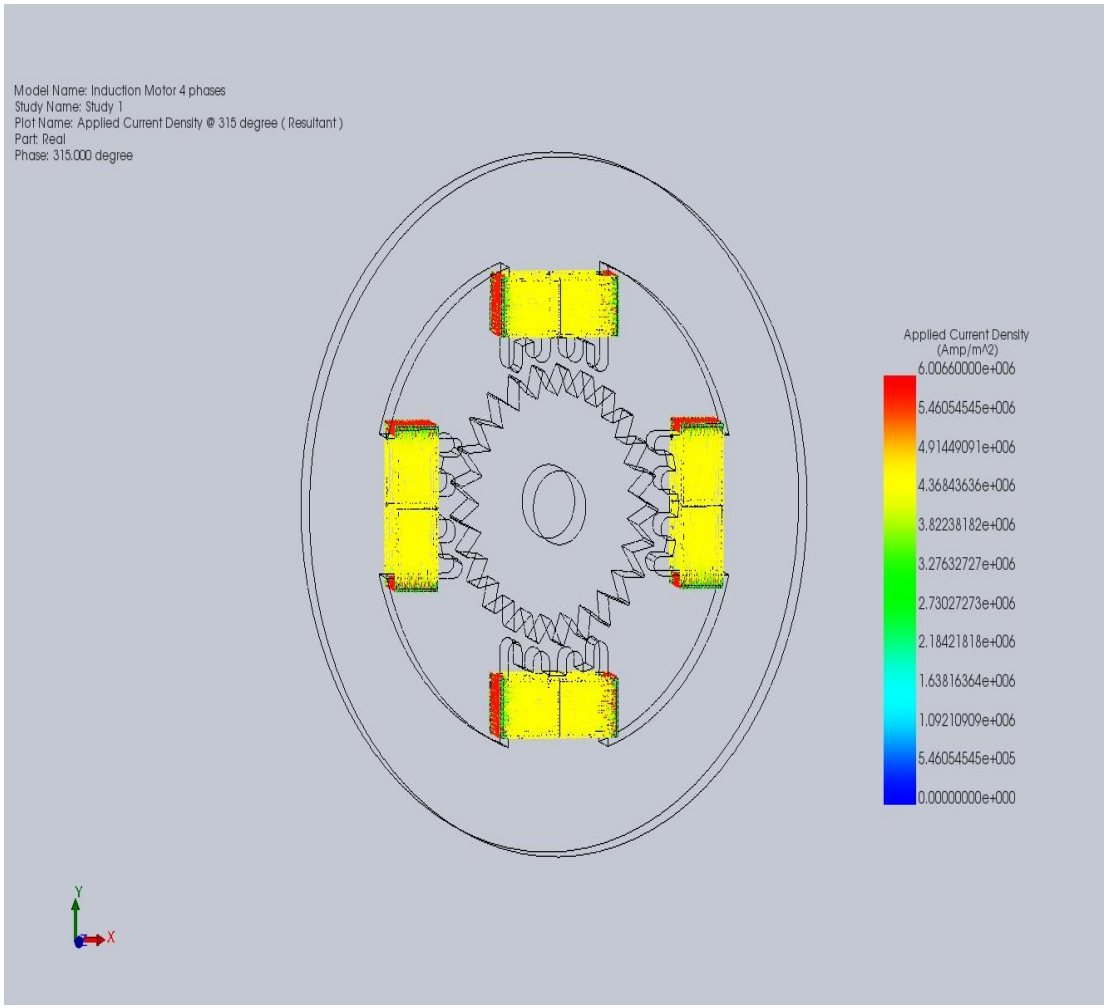

11. Current Density Results

Current Density - 1

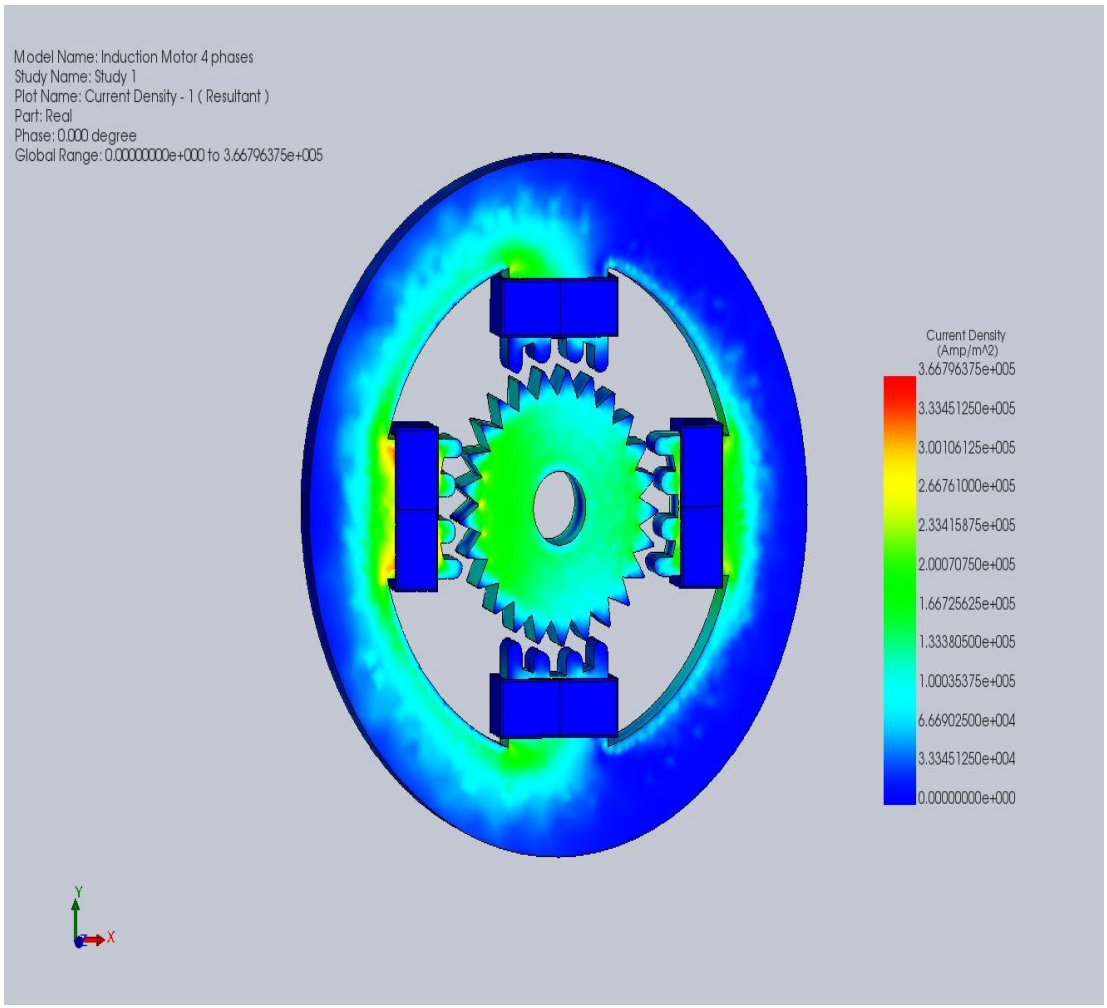

12. Force Density Results

Force Density - 1

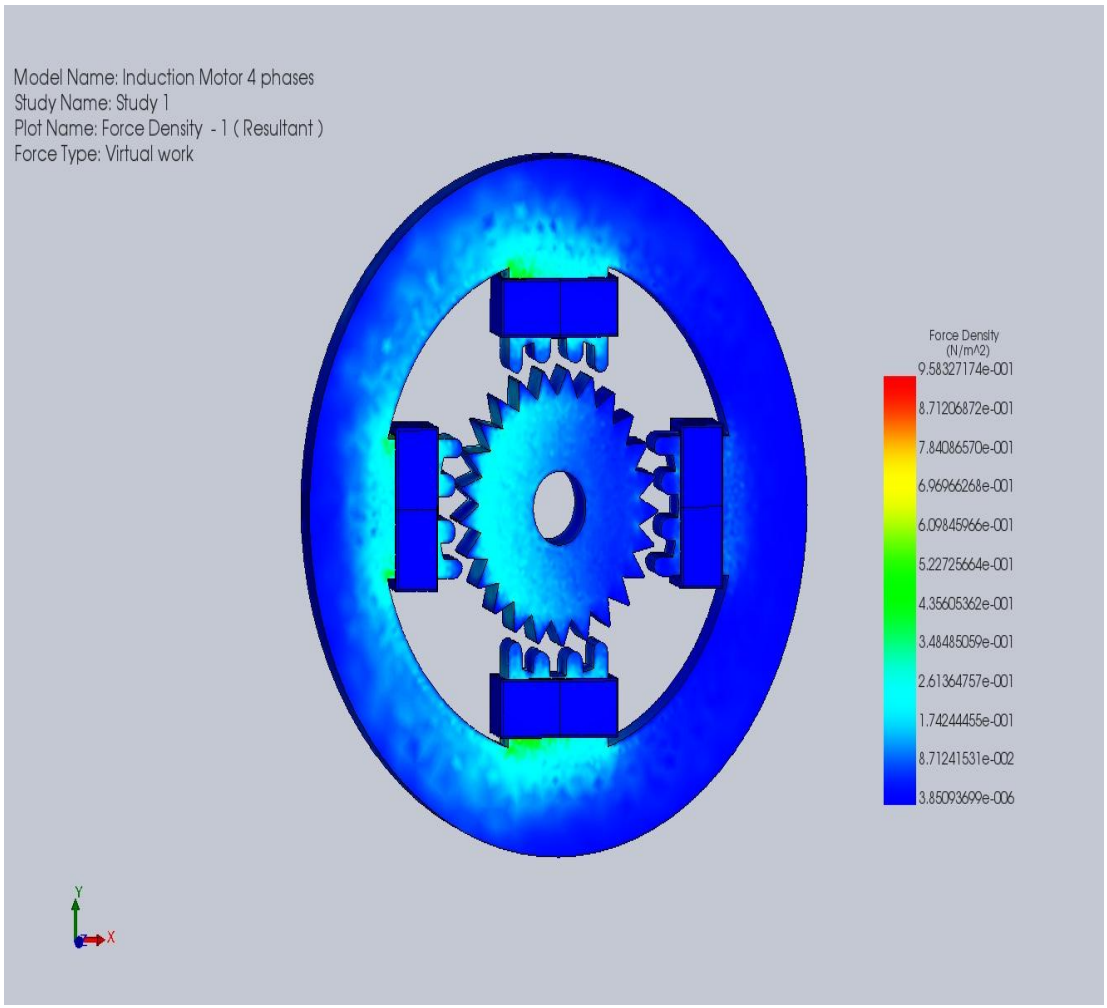

13. Appendix

Material Name: Copper

Permeability Type: Isotropic

Note: R.P. stands for Relative Permeability

R.P.	Conductivity(Mho/m)	Permanent Magnet	Thermal Conductivity (W/m.K)
1.000e+000	5.700e+007	NO	0.000e+000

Material Name: Air

Permeability Type: Isotropic

Note: R.P. stands for Relative Permeability

R.P.	Conductivity(Mho/m)	Permanent Magnet	Thermal Conductivity (W/m.K)
1.000e+000	0.000e+000	NO	0.000e+000

Material Name: Mild Steel

Permeability Type: Isotropic

Note: R.P. stands for Relative Permeability

R.P.	Conductivity(Mho/m)	Permanent Magnet	Thermal Conductivity (W/m.K)
2.000e+003	1.100e+006	NO	0.000e+000