DUAL MODE CIRCULAR WAVEGUIDE FILTER

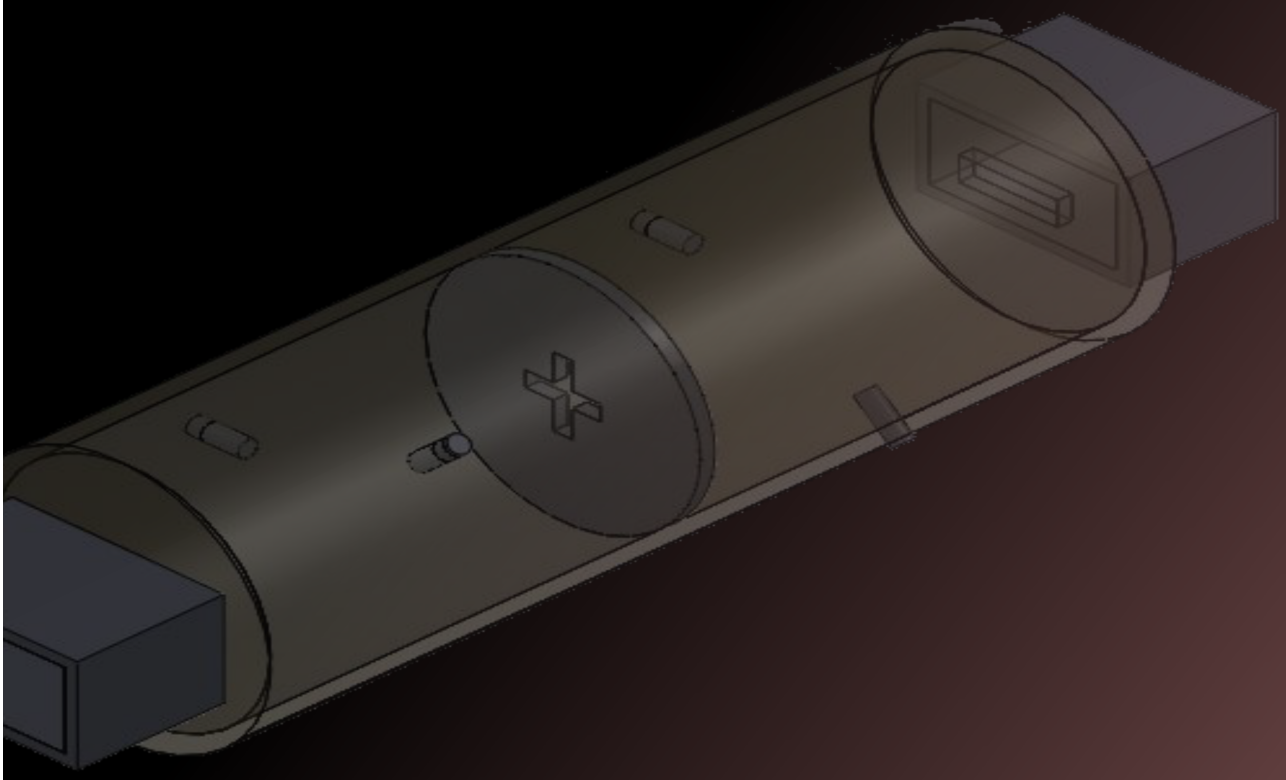

Electro Magnetic Works

Dual Mode Circular
Waveguide Filter

The CWDM (Circular-Waveguide Dual-Mode Filter) filters are widely used as narrow bandwidth band-pass filters in communication satellite output multiplexers due to their unique merits such as high unloaded Q (Quality Factor). Intensive research has been carried out on EM modeling and design of the CWDM filters [1]. The filter showed the expected performances presenting a dual mode resonance (two frequencies) using only one physical resonator.

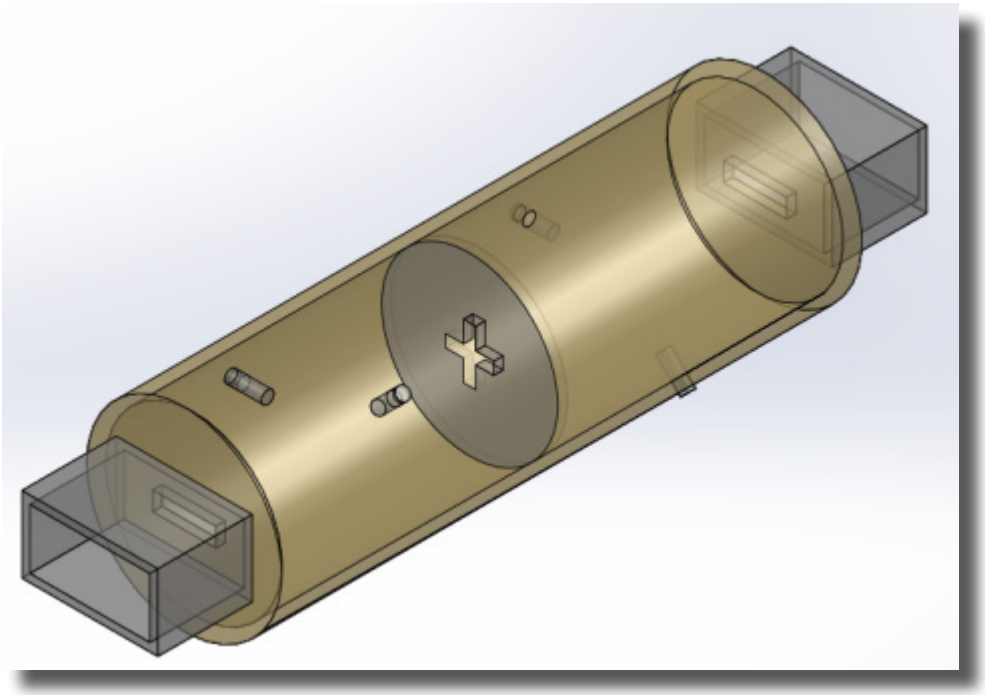

Figure 1: Circular-Waveguide Dual-Mode Filter

DIMENSIONS

The following figure shows different views of the filter's structure. All dimensions have been annotated.

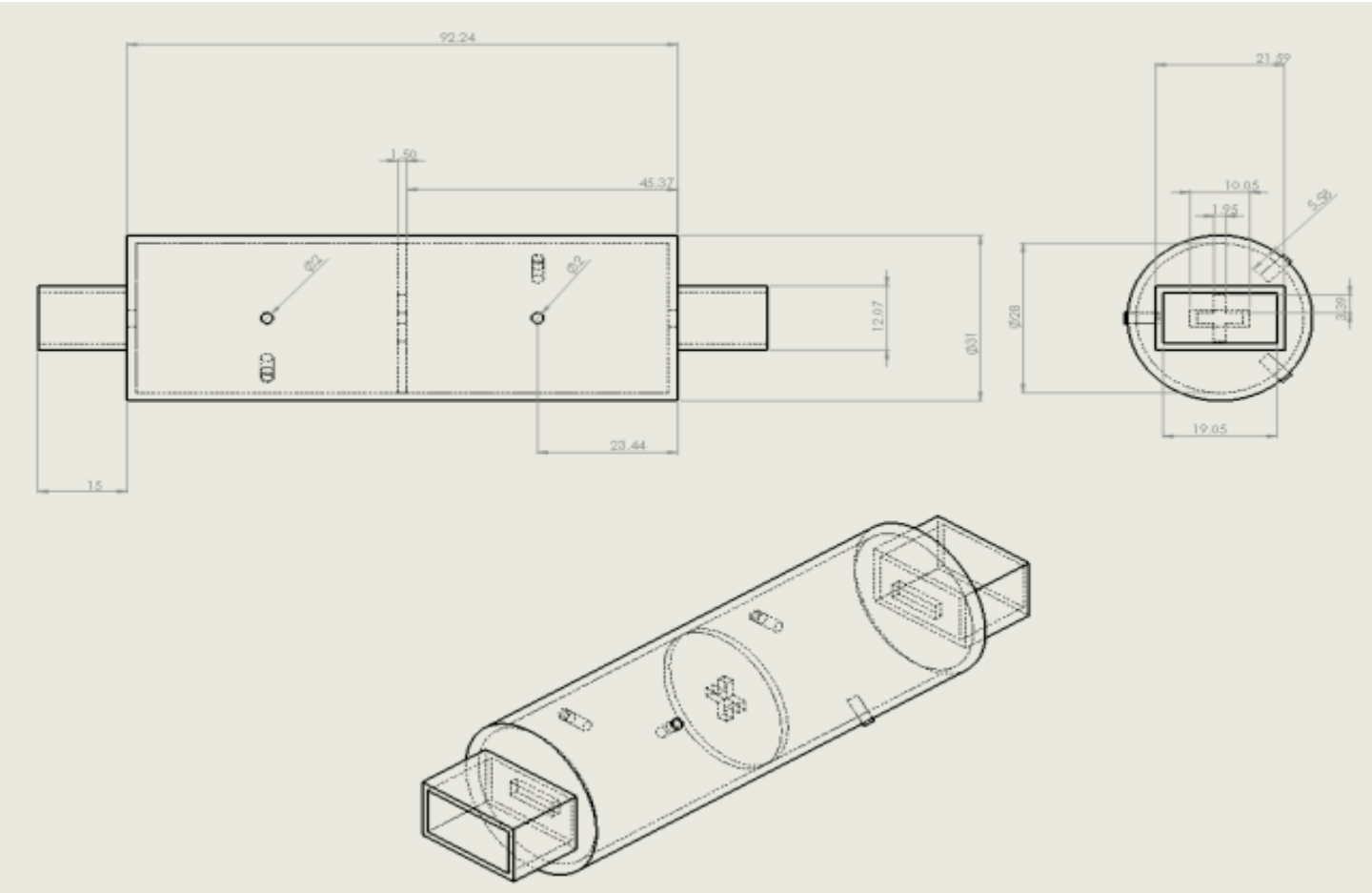

SIMULATION

The design and dimensions of the model have been optimized to a point where great performance was significantly shown alongside with good matching around 11 GHz (Ku Band satellite communications). The simulation is using the scattering parameter solver around 11 GHz with one of the available frequency plans: Fast sweep or Discrete sweep.

Fast sweep gives results faster but its precision decreases as we move away from the center frequency. The created Finite Element mesh must respond to a certain extent of accuracy to the curves and shapes introduced in the boss of the filter: As we can see: the screws have been given more attention with a finer mesh control.

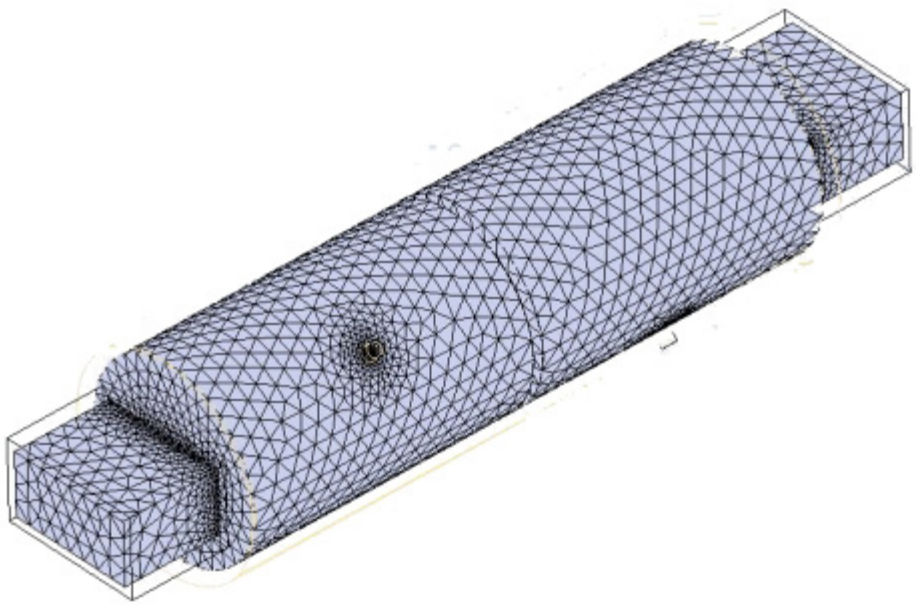

Figure 2: Model's surface meshing

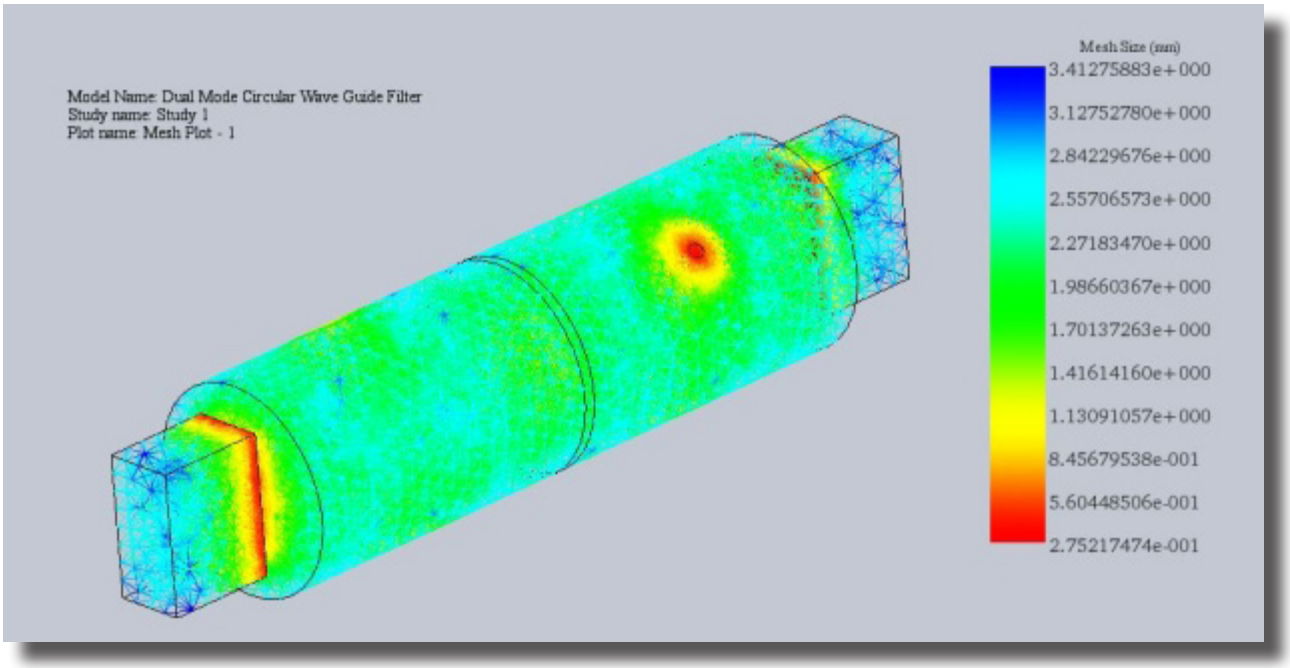

Figure 2: Model's 3D meshing

BOUNDARY CONDITIONS

The lateral faces of the hallow parallelepiped are considered as the input and output of the waveguide. The outer face of the circular filter's extruded boss is considered as perfect electric conductor. We assign air to its' inner part or hallow. The shapes inside are treated as PEC as well.

RESULTS

The outputted results show we have good performances and that the filter's performances are suitable for the aimed domain of application.

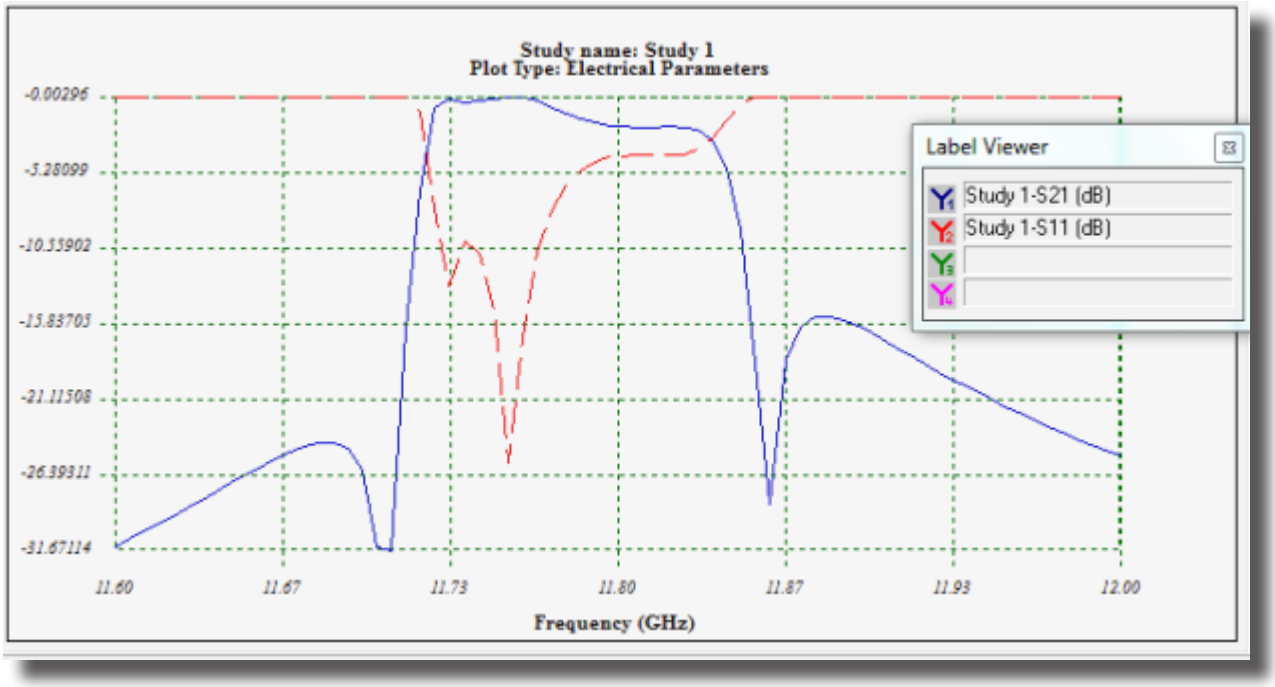

Figure 3: Insertion and return loss of the filter

Using the 3D viewer of HFWorks along with the section clipping feature, we can have a closer view on how things work in the inner part of the circular waveguide: we get to visualize the distribution of the electric field in time domain and thus the propagation of the wave from input till output. We do that for all tested frequencies in the discrete frequency plan, choosing some stopped frequency tones and other ones located in the bandpass.

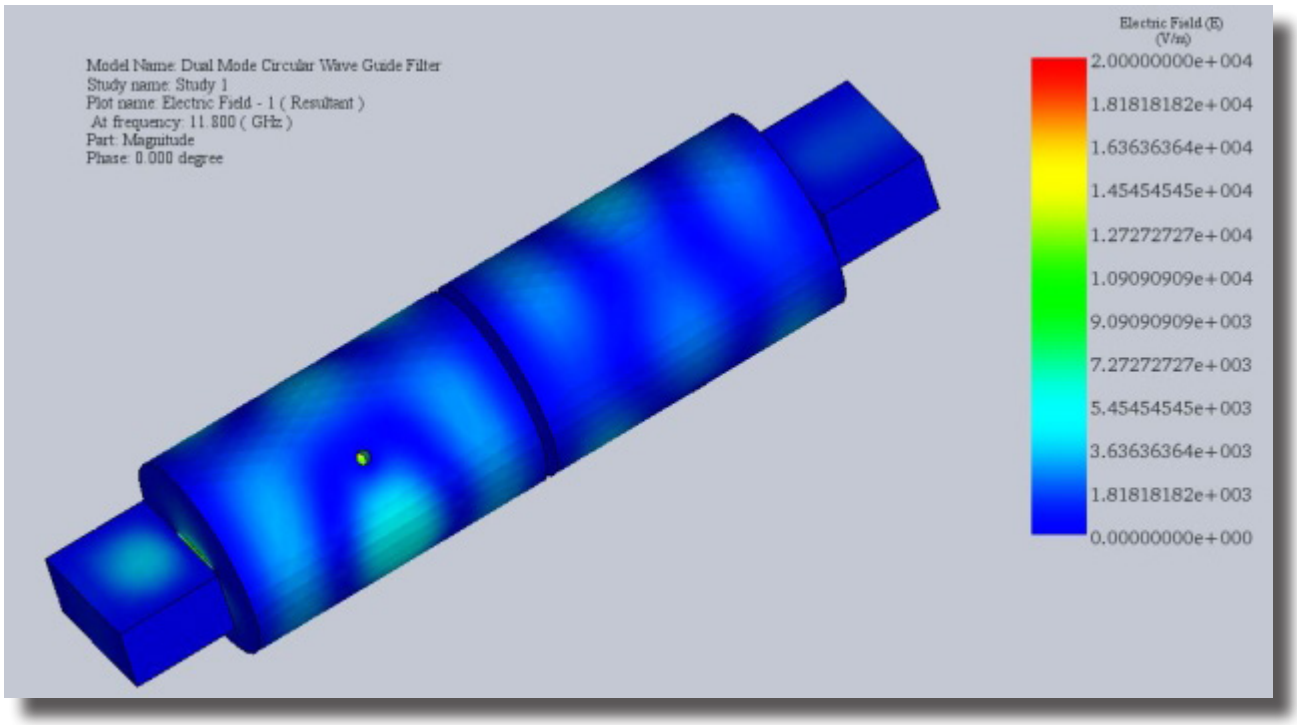

Figure 4; Inner distribution of electric field at 11.8 GHz

References

[1] An Optimal Circular-Waveguide Dual-Mode Filter Without Tuning Screws Ke-Li Wu, Senior Member, IEEE

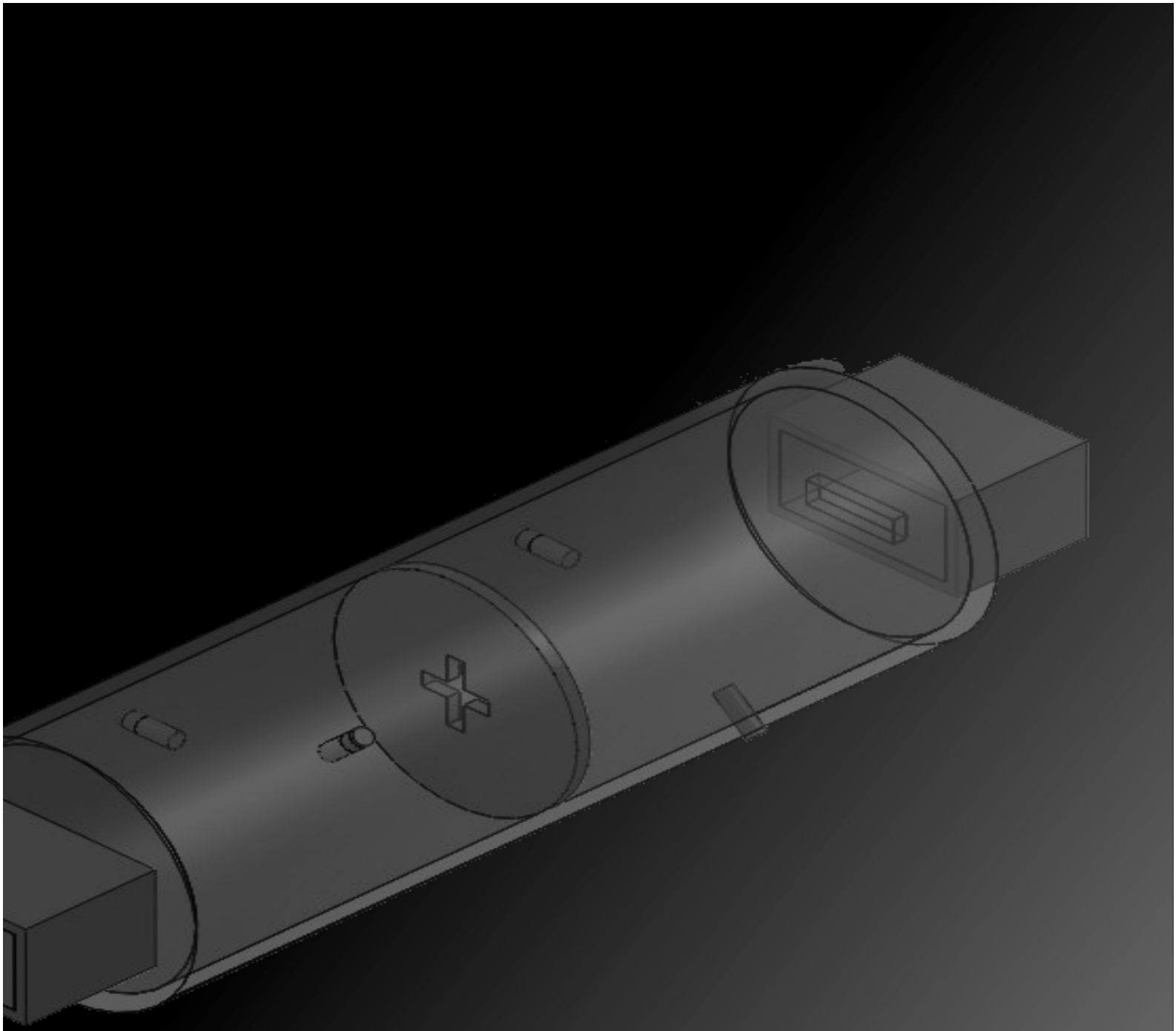

ElectroMagneticWorks Inc.
8300 St-Patrick, Suite 300, H8N
2H1, Lasalle, Qc, Canada +1
(514) 634 9797 |
www.emworks.com

ElectroMagnetic Design Made Easy

Powered By SolidWorks ©